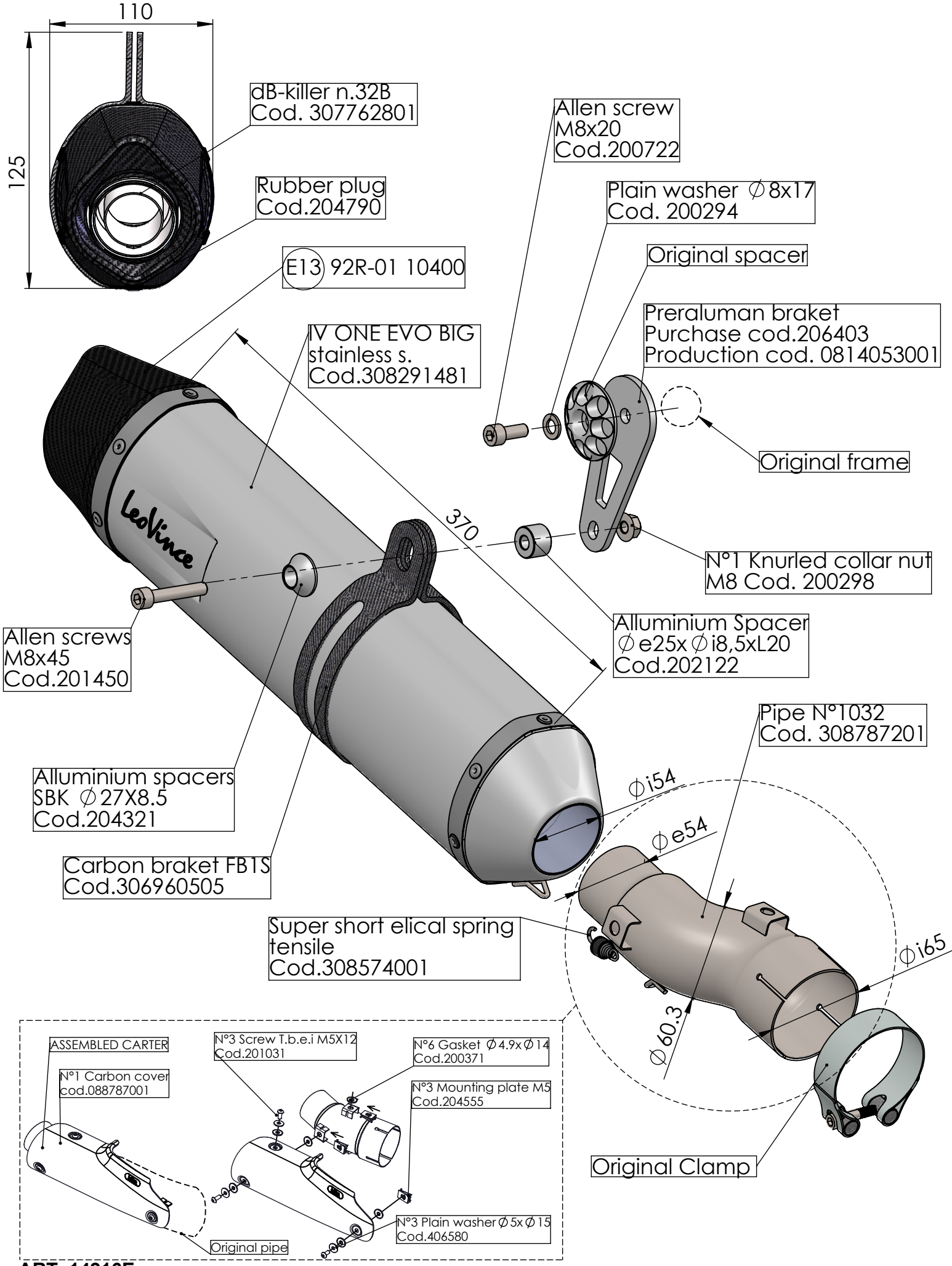

ART. 14216E
BMW R1200 GS / ADVENTURE
(fits with original panniers)

SLIP-ON - LV ONE EVO -STAINLESS STEEL - APPROVED