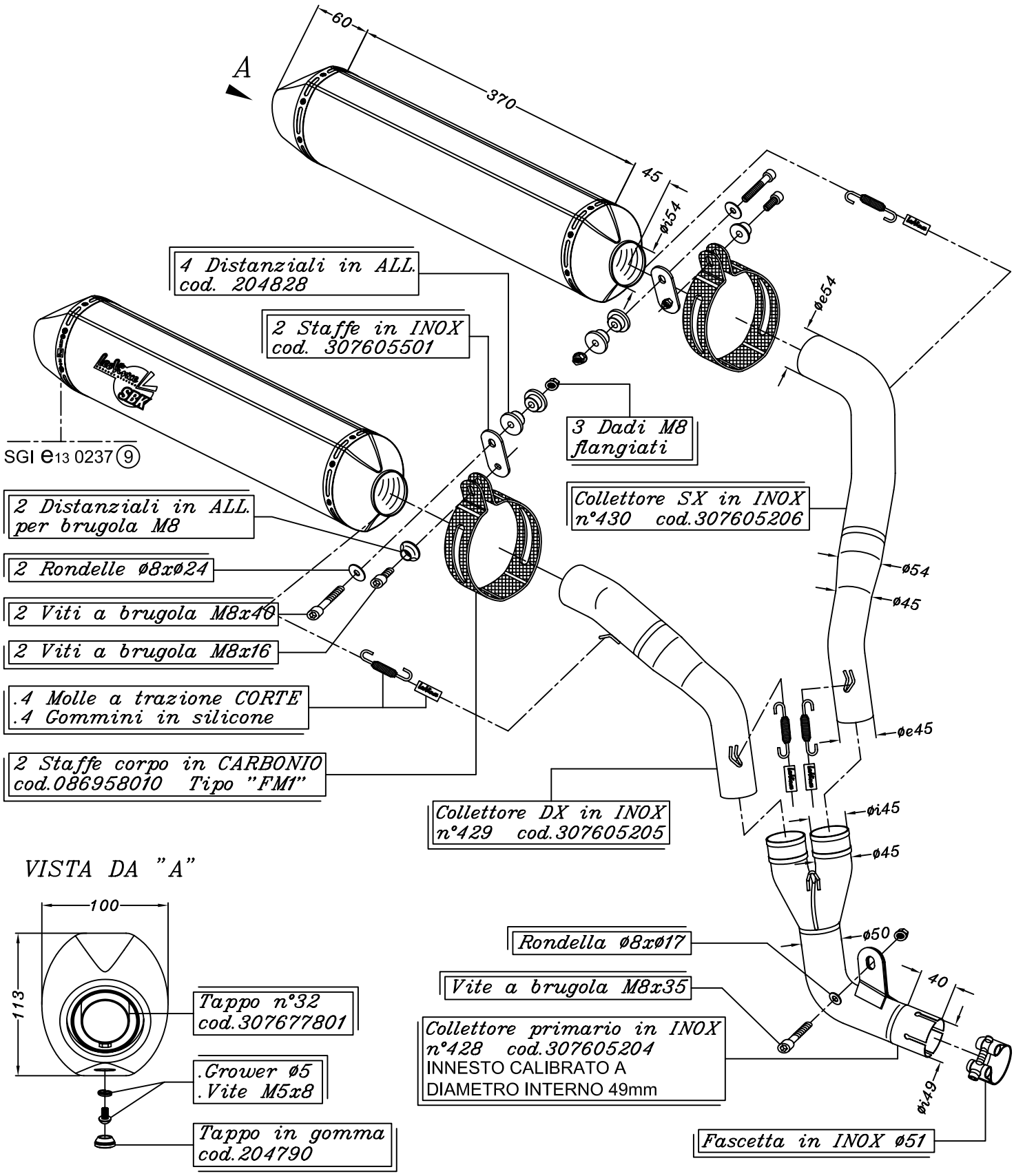

KAWASAKI ZX-10R NINJA i.e. ('06/'07)

Art.7604C Slip-on SBK FACTORY - TITANIO - Passaggio STANDARD
OMOLOGATO "EVOLUTION II"