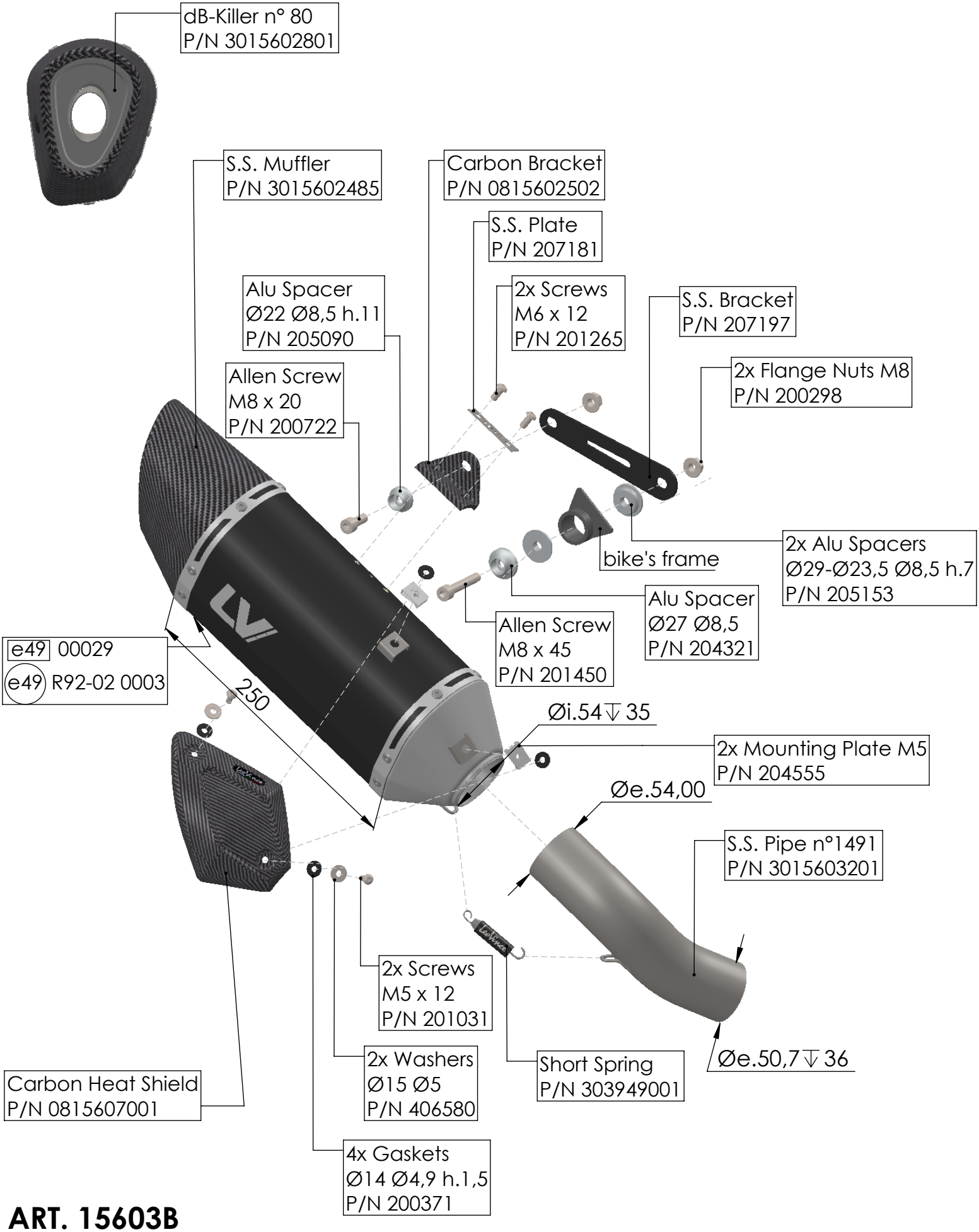

ART. 15603B

KAWASAKI Z900

SLIP-ON - LV-14R - BLACK EDITION - APPROVED