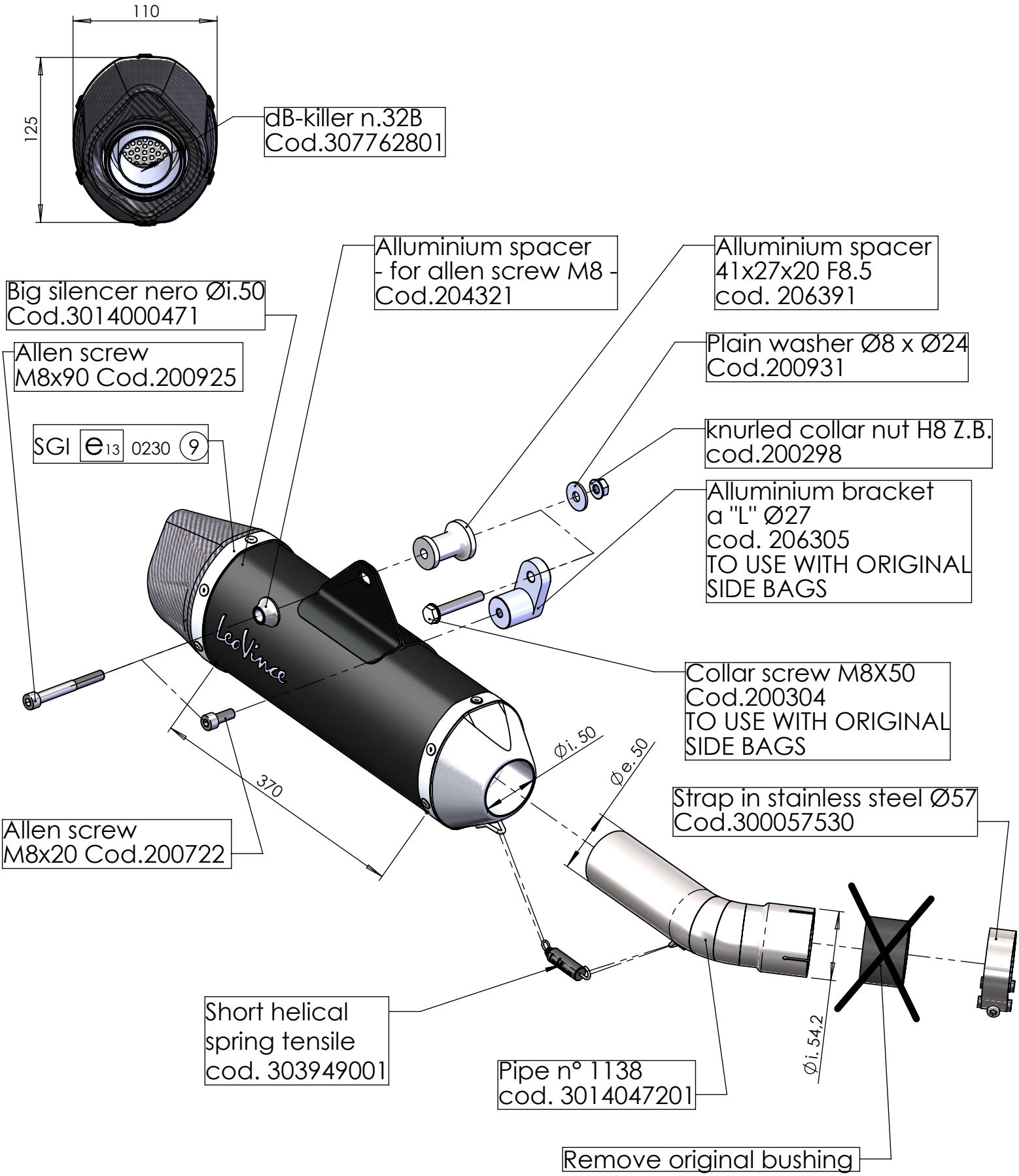

ART. 14012

SUZUKI V-STROM 1000 ABS

SLIP-ON - NERO - STAINLESS S. - APPROVED