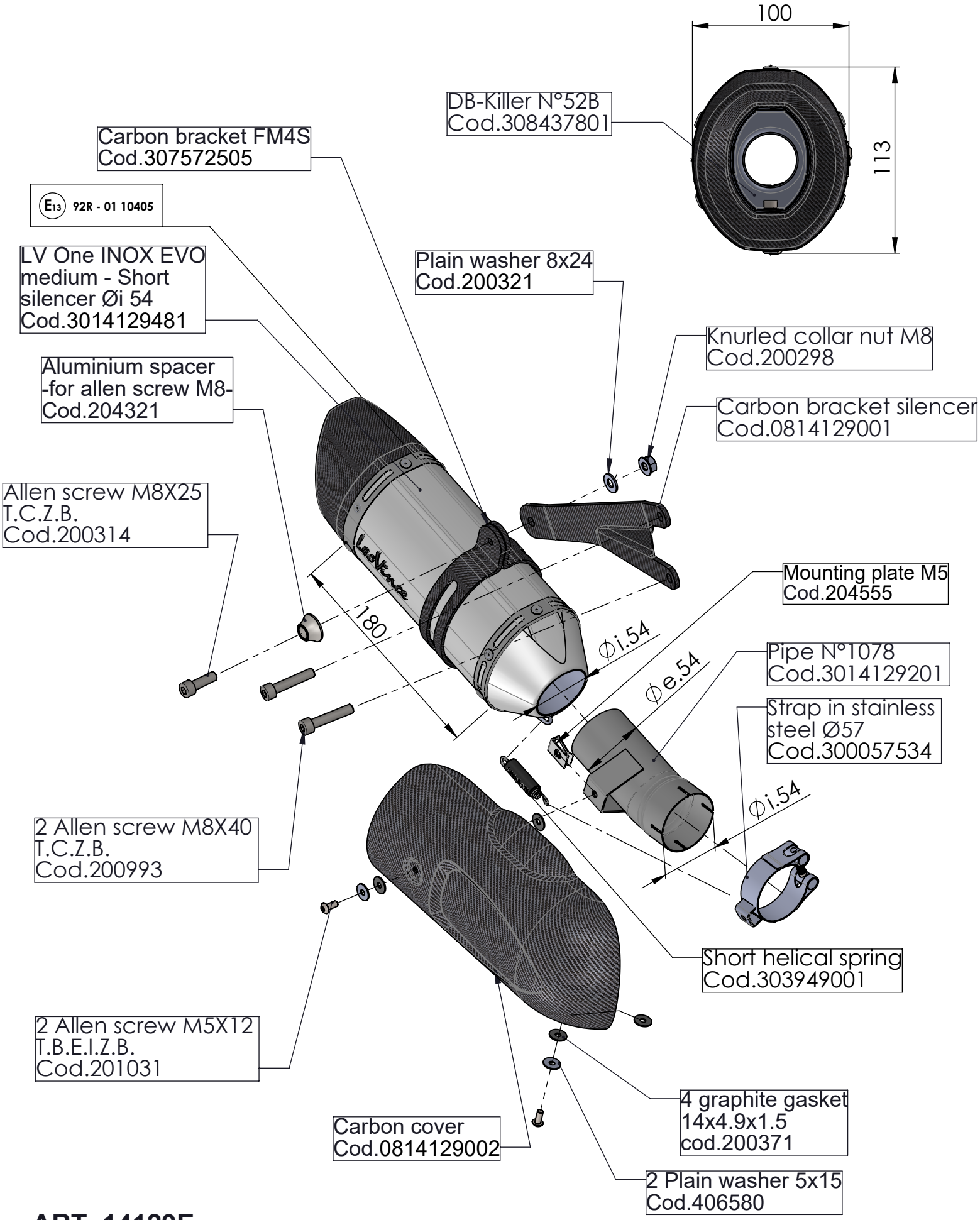

ART. 14129E

DUCATI MULTISTRADA 1200S D/AIR

SLIP-ON - LV - PRO - STAINLESS STEEL - APPROVED