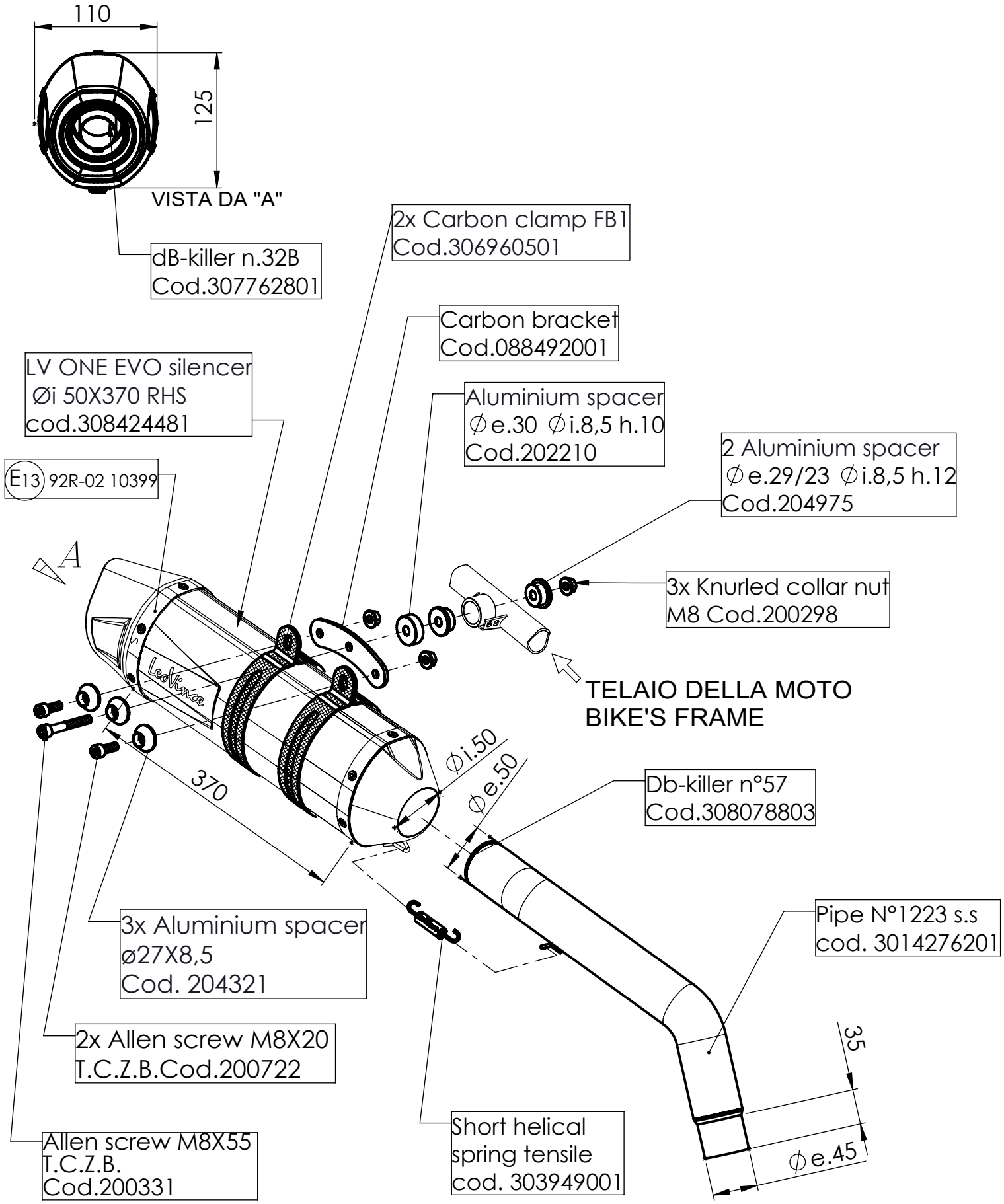


**ART.14276E**

TRIUMPH TIGER 800 XR/XRX/XCX/XRT/XCA/XRX LRH/XCX LRH

(35kW) (fits with original panniers)

SLIP-ON - LV ONE EVO - STAINLESS S. - APPROVED