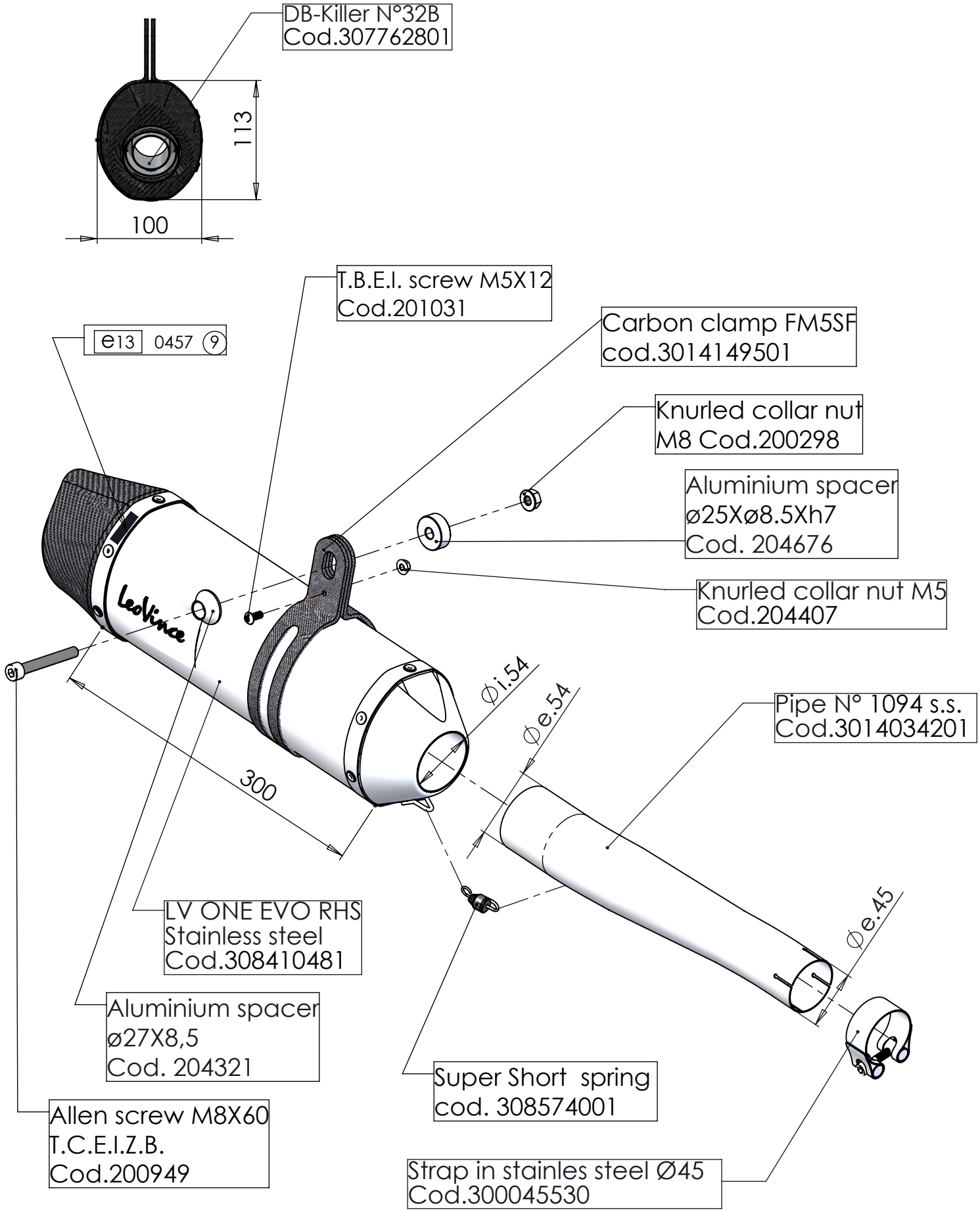

ART. 14160E

HONDA CB 500 F - CBR 500 R

SLIP-ON - LV ONE EVO - STAINLESS STEEL - APPROVED