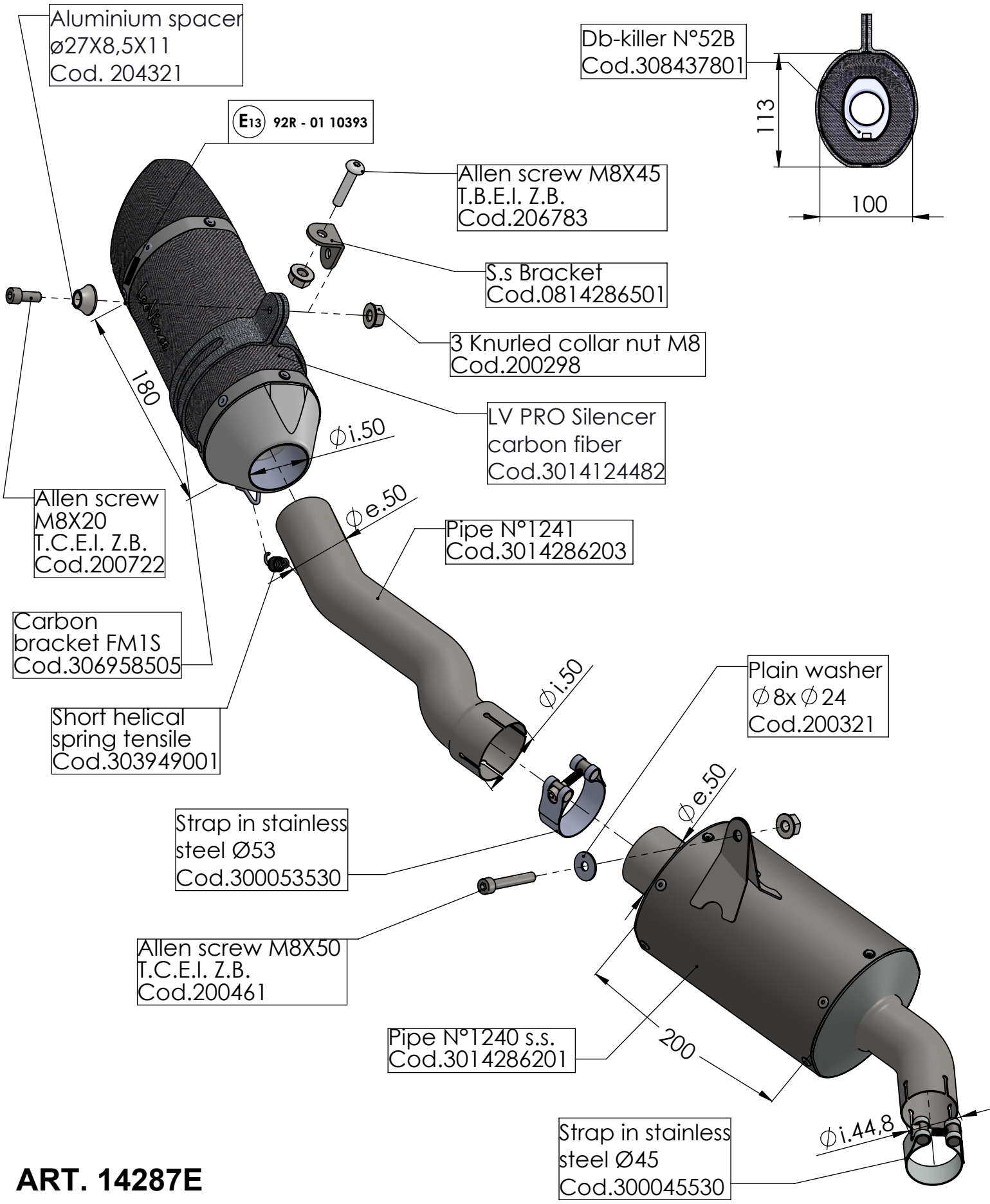

ART. 14287E

TRIUMPH STREET TRIPLE 765 S / SA2 / R / R LRH / RS
(also fits 660cc model, 35/70kW versions)

SLIP-ON - LV PRO - CARBON - APPROVED