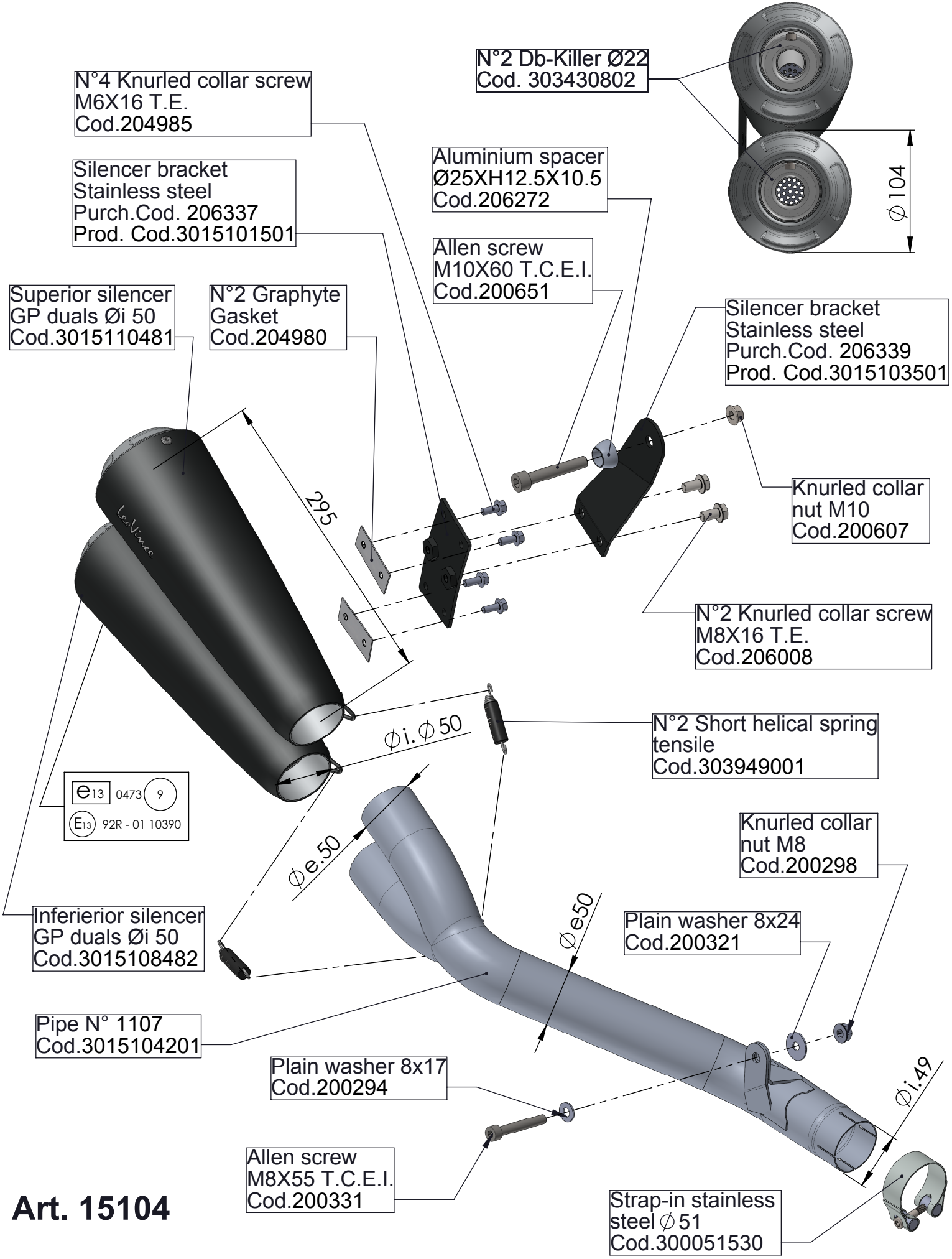

Art. 15104

KAWASAKI Z800 E

Slip-on "GP DUALS" - APPROVED