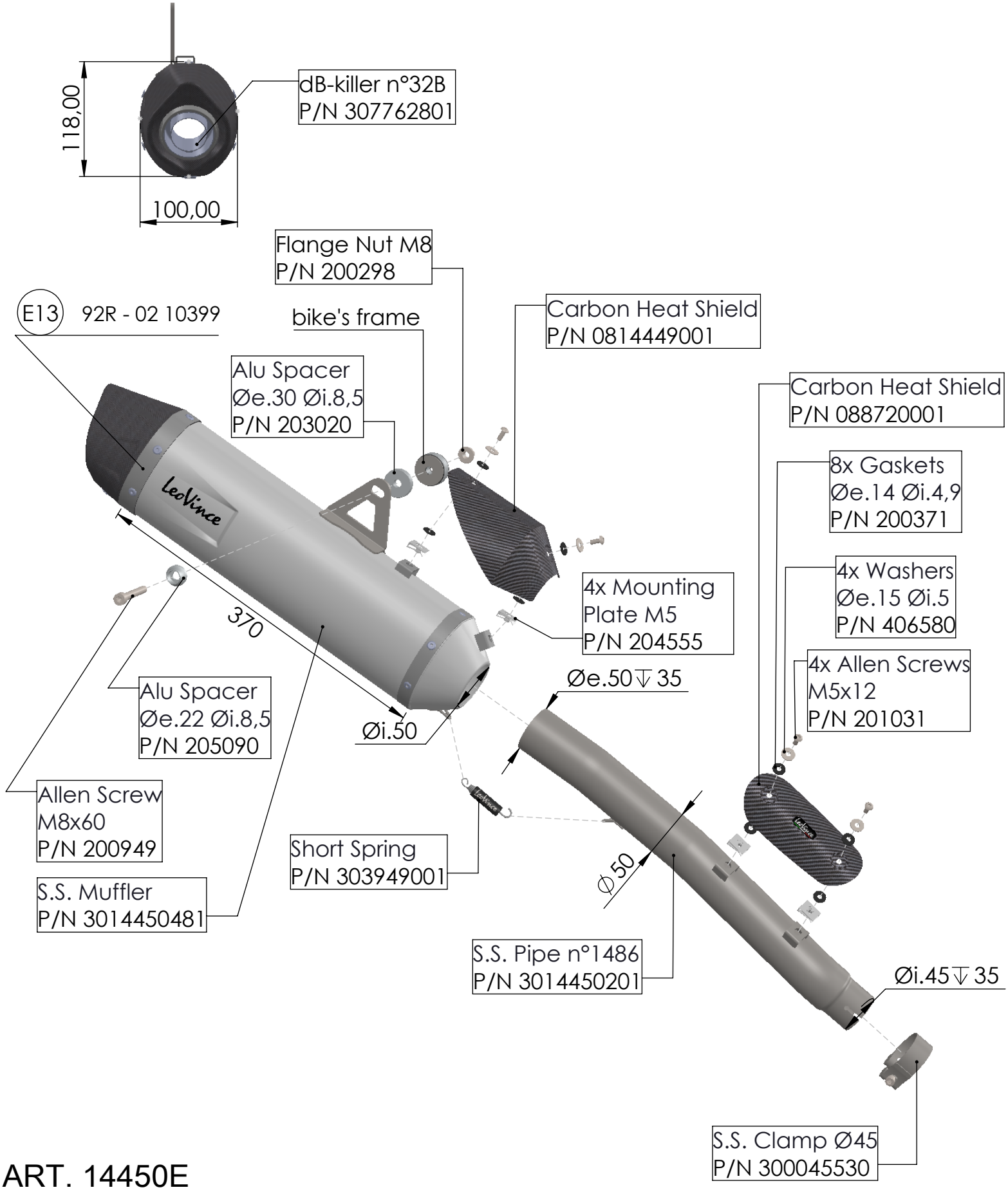

ART. 14450E

TRIUMPH TIGER 900 GT / GT PRO / RALLY PRO
(fits with original panniers)

SLIP ON - LV ONE EVO - STAINLESS STEEL - APPROVED