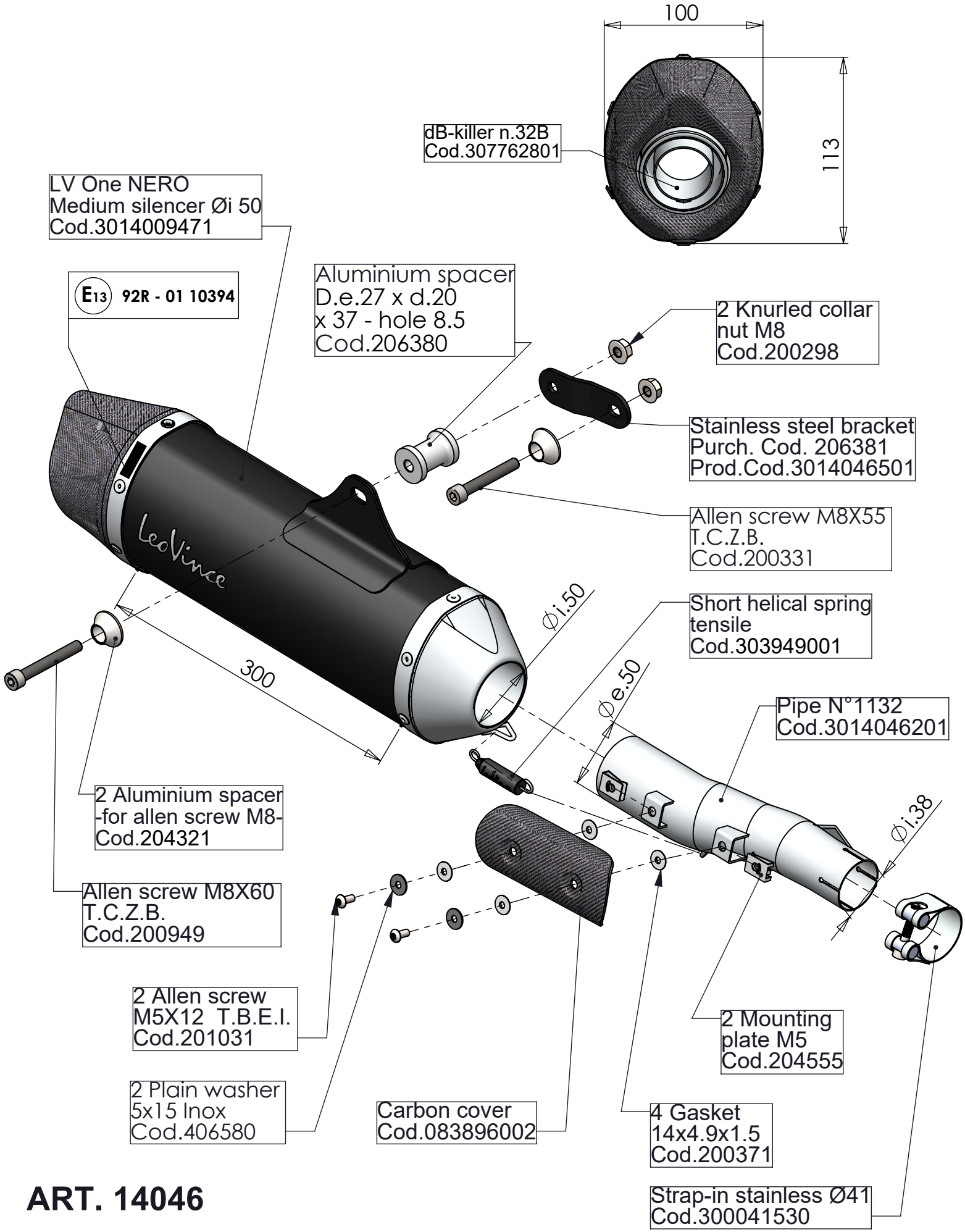

ART. 14046

HONDA X-ADV / FORZA 750 (also fits A2 version)

SLIP-ON - "NERO" MEDIUM - STAINLESS STEEL - **APPROVED**